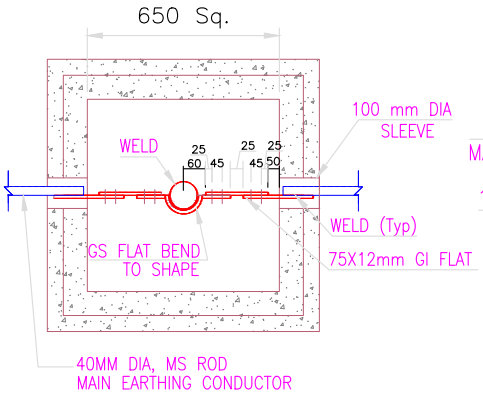

PLAN – 3M LONG PIPE ELECTRODE
WITH TREATED EARTH PIT

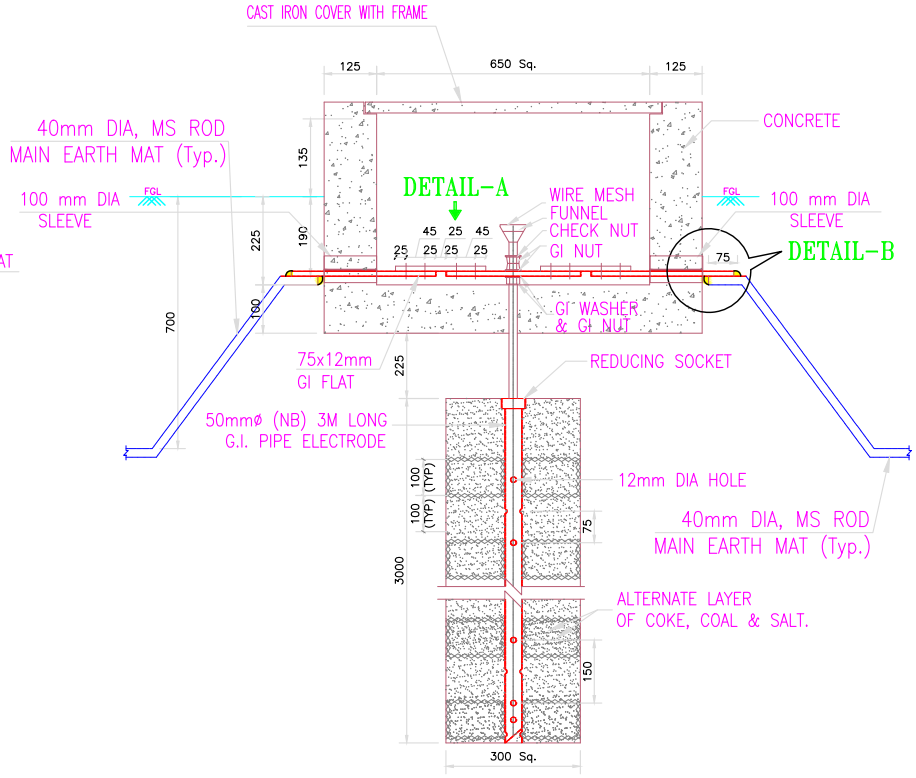

DETAILS OF 3M LONG PIPE ELECTRODE
WITH TREATED EARTH PIT

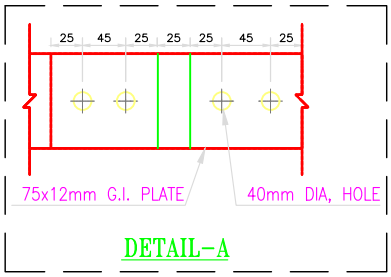

DETAIL–A

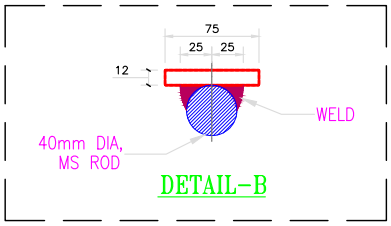

DETAIL–B

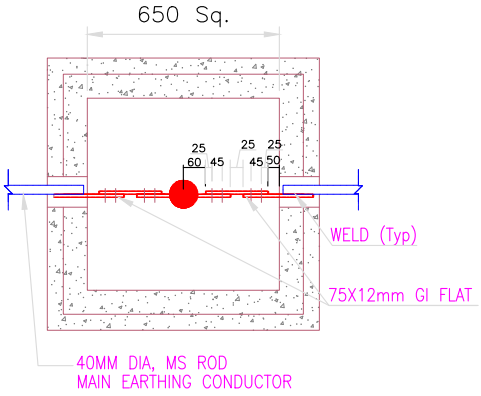

PLAN – 3M LONG ROD ELECTRODE
WITH UNTREATED EARTH PIT

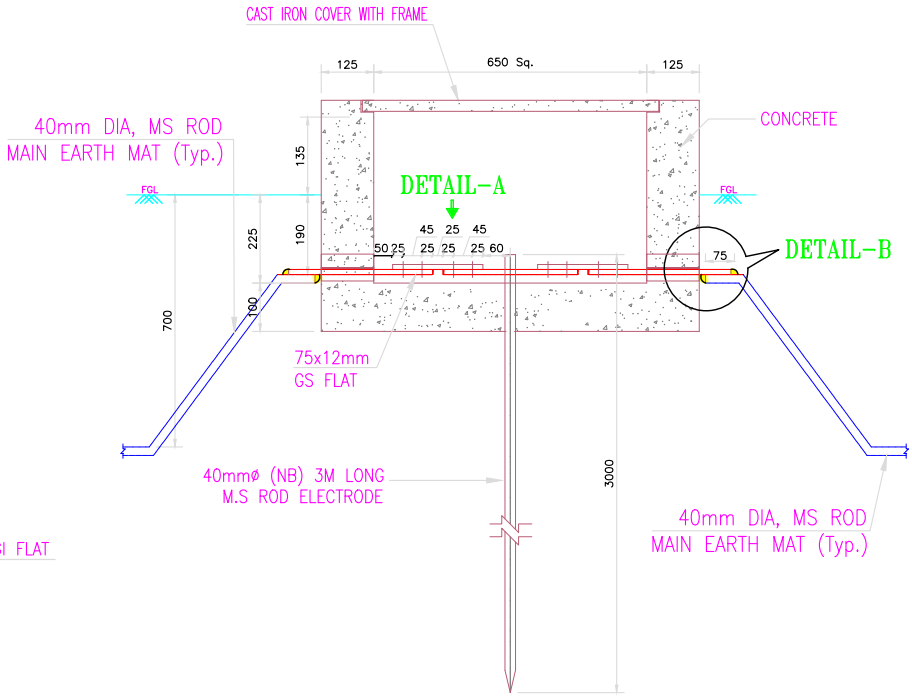

DETAILS OF 3M LONG ROD ELECTRODE
WITH UNTREATED EARTH PIT

A4 SHEET–297x210mm